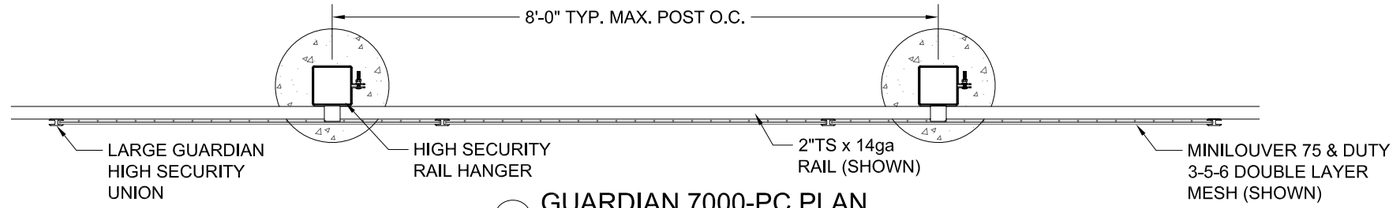

2 GUARDIAN 7000-PC PLAN

SCALE: NTS

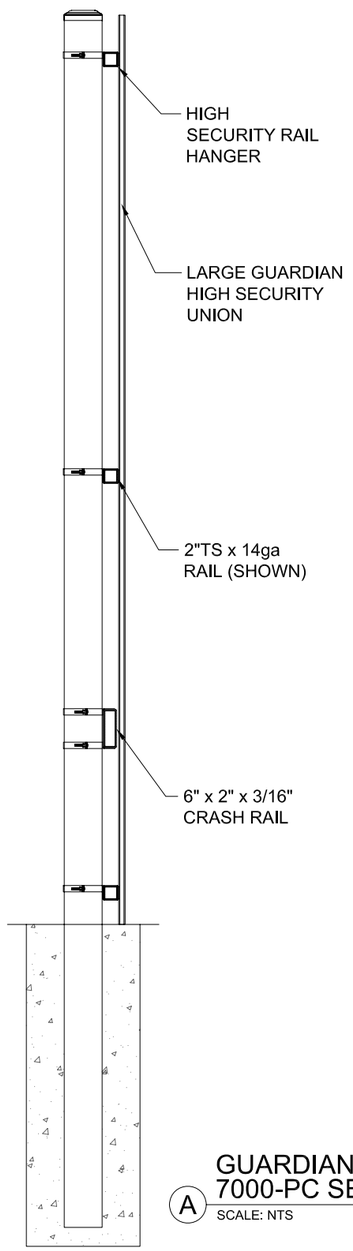

A GUARDIAN 7000-PC SECTION

SCALE: NTS

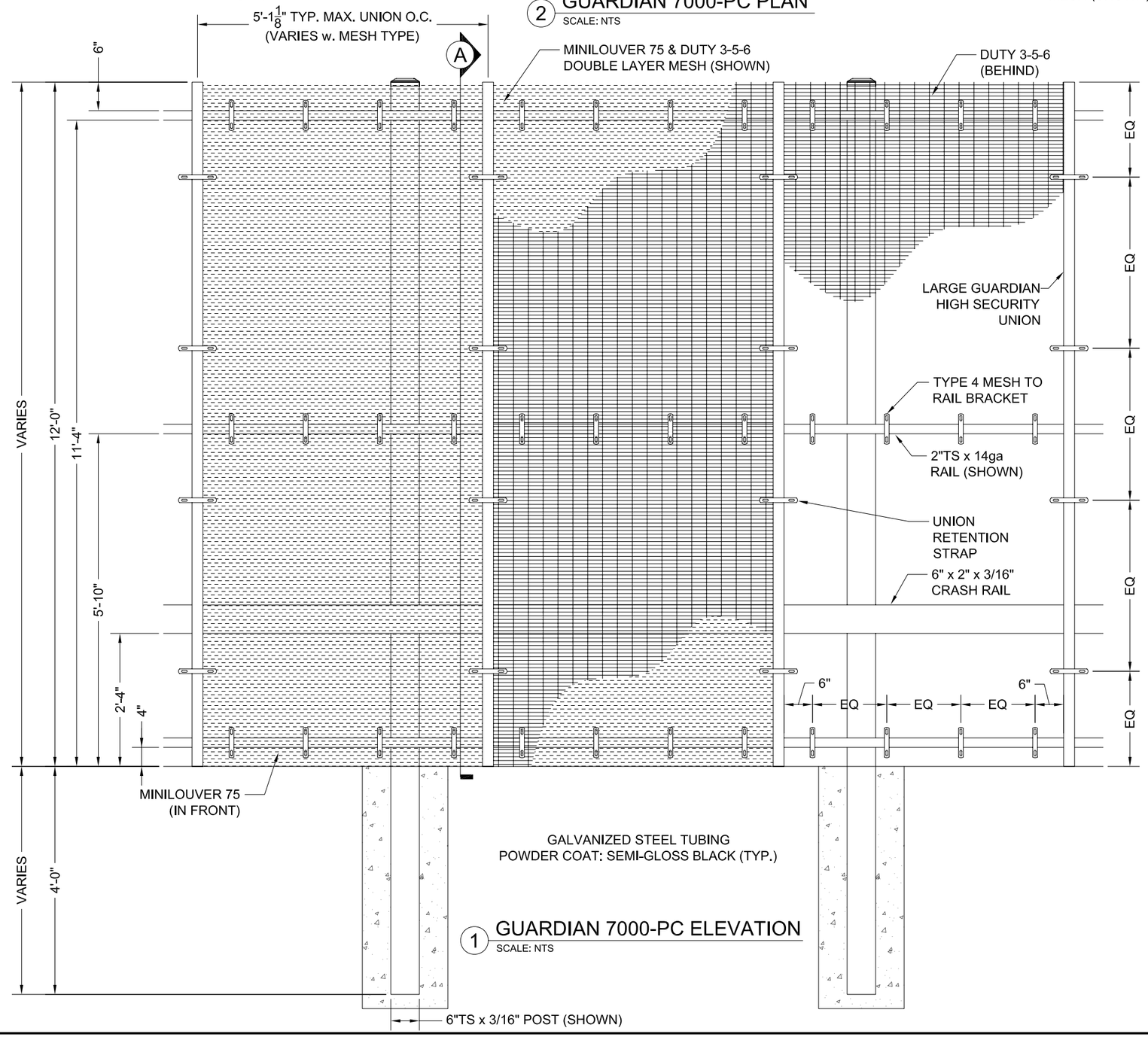

1 GUARDIAN 7000-PC ELEVATION

SCALE: NTS

BETAFENCE USA
MANUFACTURED BY PAYNE
Main: 972-878-7000 Fax: 214-877-4552
3309 S. I-45 ENNIS, TX 75119
www.BetafenceUSA.com

GUARDIAN 7000-PC

PROJECT NAME :
CUSTOMER :
SALES ORDER
STORE #

VIEW:	MULTI
SCALE:	NTS
DRAWN BY:	XXXX
CHECKED BY:	XXXX
APPROVED BY:	XXXX
DATE:	XX-XXX-XX
FILE:	Guardian7000-PC.dwg

REV	DATE	DRAFTER

SHEET 1 OF 1